EVM

EMBEDDED ZERO-LATENCY WIRELESS VIDEO MODULES FOR MEDICAL DEVICES

Embedded wireless transmitter and receiver modules for OEM/ODM partners building wireless video into their medical devices.

Compact, low-power modules delivering up to 4K video over a board-to-board HDMI interface. Designed for endoscopy CCUs, surgical monitors, OR light and headlight cameras, C-arms and microscopes.

KEY FEATURES

- 4K video, up to 3840×2160
- ~1 ms latency for real-time video
- Plug-and-play: no drivers or setup required
- API for advanced control
- Compatible with Rocoto MD11, MD62 and SL11
- Automatic channel selection in the 5 GHz band
- 2×5 or 4×5 MIMO with small antennas
- AES-256 encrypted video link



rocoto

rocotosolutions.com

Zero latency

4K

Reliable link

EM

	EM10/11 Transmitter	EM21 Transmitter	EM10/11/21 Receiver
Dimensions	57.5mm x 37.5mm	70mm x 56mm	70mm x 55mm
Connector	50 Pin connector	100 Pin connector	120 Pin connector
Video Interface	HDMI		
Control	UART/ SPI/ USB		
Power Input	5V		
Power Consumption	5W	6.5W	5W
Antennas	2	4	5
Video Formats	EM10 - up to 1080P60fps EM11 - up to 4K30fps	Up to 4K30fps	EM10 - up to 1080P60fps EM11/21 - up to 4K30fps
Radio Frequency	5.1-5.9GHz, 20MHz or 40MHz bandwidth		
Regulation	FCC, CE, MIC, IC, KC		
Environment	Operation: 0-40°C, 10%~90% humidity Storage: 0-55°C, 10%~90% humidity		
Transmitter Tradeoffs	Smaller form factor & Low power consumption	Better picture quality in 4K	—

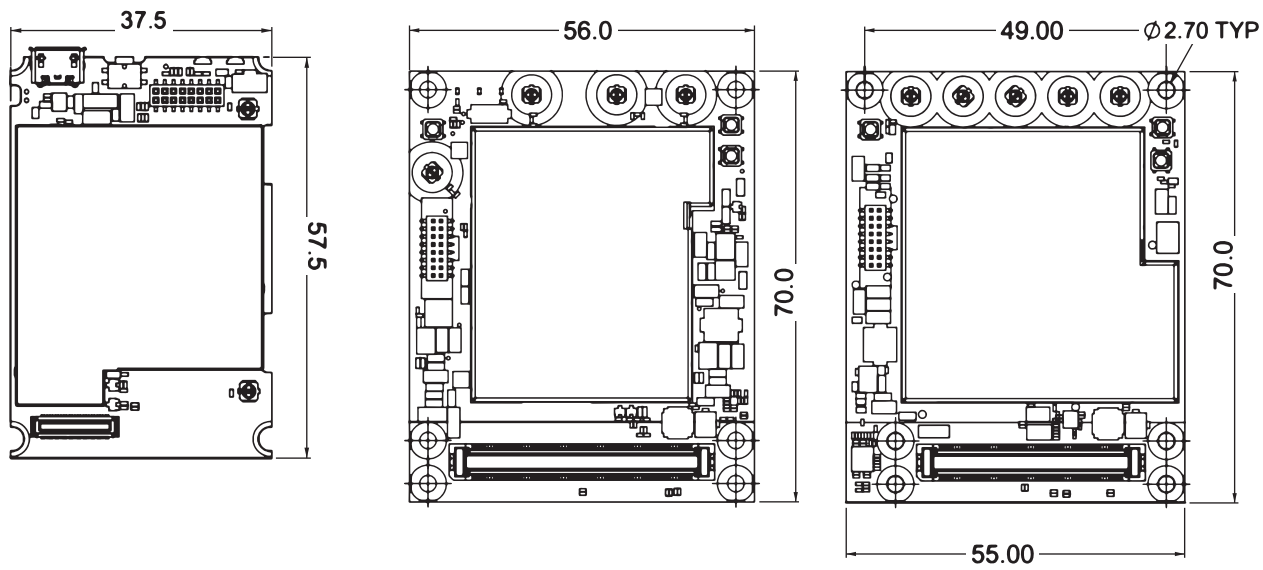

rocoto

rocotosolutions.com

Zero latency

4K

Reliable link